ERS-997SH

EVERMO®
DC MICRO MOTOR
Carbon-brush motors

OUTPUT :2.1W~155W (APPROX)

WEIGHT : 640g (APPROX)

Typical Applications **Cordless Power Tools:** Drill, Cordless Garden Tool, Circular Saw

Others: Air pumps, Electric Fan, Geared Motor, Electric Model toy

Typical Specifications

MODEL	VOLTAGE		NO LOAD		AT MAXIMUM EFFICIENCY						STALL		
	OPERATING RANGE	NOMINAL	SPEED r/min	CURRENT A	SPEED r/min	CURRENT A	TORQUE g.cm	TORQUE mNm	OUTPUT W	EFF. %	TORQUE A	TORQUE g.cm	CURRENT mNm
ERS-997SHF-6513	5.0~10.5	10.5V CONSTANT	7000	1.85	6125	12.9	1438	140.93	86.4	63.76	90	11500	1127
ERS-997SH-3768	6.0~12.0	6.0V CONSTANT	650	0.18	507	0.63	418	40.97	2.08	55.03	2.2	1900	186.2
ERS-997SHF-8012	7.0~14.0	14.0V CONSTANT	8900	1.10	7889	8.58	1090	106.82	88.2	73.45	67.0	9600	940.8
ERS-997SHF-8508	7.0~14.0	14.0V CONSTANT	13000	2.50	11160	15.17	1274	124.86	145.9	68.69	92	9000	882
ERS-997SHF-8010	7.0~14.0	14.0V CONSTANT	11000	1.40	9808	12.76	1278	125.25	128.7	72.0	105.0	11800	1156.4
ERS-997SH-7009	6.0~12.0	12.0V CONSTANT	9800	1.95	8808	17.32	1713	167.88	154.9	74.6	153.8	16930	1659.14

◎NOTE: 1)Casing ring 2) Ring varister 3) Capacitor for options only.

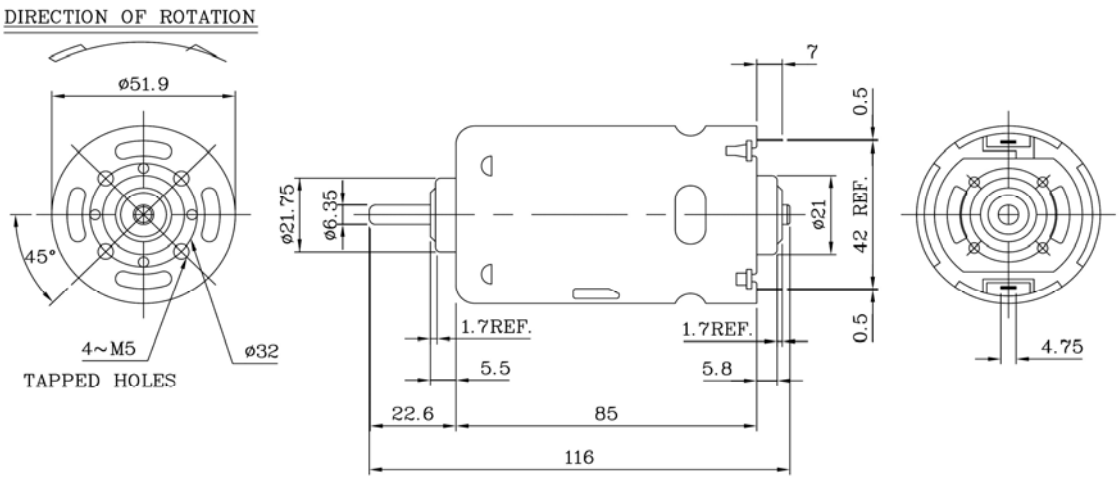

Usable machines screw length 4.0max.from motor mounting surface.

UNIT: MILLIMETERS

Copyright © 2010 EVERMO Micro Motor Co., Ltd. All Rights Reserved